HP21-NX

Heat Pump Single Compressor with Auxiliary Heat

OPERATING INSTRUCTIONS

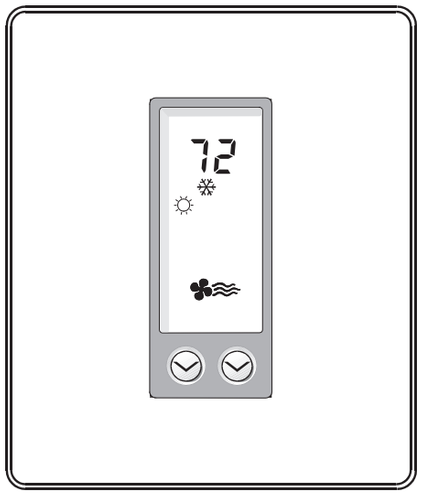

SEE REVERSE FOR
INSTALLATION INSTRUCTIONS

Your new electronic digital thermostat has been designed to provide accurate control and display of room temperature. In addition, it also will display all relevant information pertaining to your system.

The clearly marked buttons and informative display make it extremely easy to understand and simple to use.

Please take a few moments to read the brief instructions and familiarize yourself with the various functions in order to obtain maximum benefit from this truly unique electronic control.

GENERAL INFORMATION

The thermostat normally displays room temperature, mode of operation and whether cooling or heating is currently on. The six buttons on the front of the unit allow complete control of your equipment.

You may select different heating and cooling setpoints for the system to maintain, e.g., 70° in heating and 75° in cooling. Raising or lowering the setpoints in heating or cooling is as simple as pushing a button. In addition, you may choose to display the temperature in °F or °C.

The thermostat also allows you to select continuous fan operation (useful when using an air cleaner) or have the fan come on with the equipment.

USER CONTROLS

MODE - Select the desired mode of operation by repeatedly pressing the MODE button:

❄ – indicates cooling system only (the word COOL is displayed for 5 seconds)

🔥 – indicates heating system only (the word HEAT is displayed for 5 seconds)

🔥 ❄ – indicates both the heat and cool systems (the word AUTO is displayed for 5 seconds)

❄ **Blinking** – indicates cool ON

🔥 **Flickering** – indicates heat ON

OFF – disables controller so equipment will not operate (fan operation is still possible in this mode).

Eht - Emergency heat

COOLING ❄

Select the temperature you want your equipment to maintain while in the cooling mode by pressing and holding the ▼ or ▲ button. The control setpoint temperature is displayed for 5 seconds.

HEATING 🔥

Select the temperature you want your equipment to maintain while in the heating mode by pressing and holding the ▼ or ▲ button. The control setpoint temperature is displayed for 5 seconds.

FAN

The fan will come on automatically when the system is operating, but there is no indication of this on the display. To select continuous fan operation, press the FAN button and the display will show . This is recommended for electronic air cleaners and continuous ventilation requirements.

OFF

To turn off the heating or cooling system, press the MODE button until the word OFF appears on the LCD. It will remain displayed until the mode is changed. The OFF mode prevents the system from being energized.

Avoid using the OFF mode during extremely cold weather to prevent damage to the equipment from freezing.

AUTO CHANGEOVER

You may set the thermostat to switch automatically from heating to cooling mode by pressing the MODE button until the word AUTO and both the heating 🔥 and cooling ❄ icons appear on the LCD. The thermostat will energize the heating or cooling system based on the temperatures established for both modes.

TEMPORARY TEMPERATURE OVERRIDE WITH KEYPAD LOCKED

(The keypad may be locked to prevent tampering by selecting the ON position of DIP switch #4.)

If the keypad is locked to prevent tampering you may temporarily adjust the setpoint by ±3°F of the programmed day setpoint. Press the ▼ or ▲ button to raise or lower the setpoint for a 1 or 3 hour period, depending on DIP switch settings.

USER CONTROLS (Cont'd)

OUTDOOR (ODT) BUTTON

When the outdoor temperature sensor is connected to your thermostat, you can display the current outdoor temperature by pressing the OUTDOOR button. If the sensor is not connected, the thermostat will display - -.

DAY/NIGHT BUTTON

When the thermostat initially is installed, the display will show the ☼ symbol for your day temperature. By pressing the DAY/NIGHT button you may select an alternate or night temperature ☾ (the thermostat will remember this setpoint). Simply press the DAY/NIGHT button to alternate between temperature settings.

CELSIUS / FAHRENHEIT

Simultaneously press ▼ and ▲ to switch between Celsius (°C) and Fahrenheit (°F) temperature display.

COMMUNICATIONS (OPTION) X1 - X2

The thermostat is designed to accept any of the Net/X family of remote communications controllers (available separately). The controllers allow full functionality and control from a distance of up to 1000 feet away.

REMOTE SENSOR (OPTION)
RS1 – RS2 – RS+V

The thermostat is designed to accept the electronic remote sensor, which will allow you to locate your thermostat in an area away from view. Indoor and outdoor sensors are available separately.

CLOCK TERMINALS (OPTION) CLK1 – CLK2

Your thermostat is equipped with a dry contact closure input. By connecting to any relay-based controller or clock timer, the thermostat can be alternated between the day and night (setback) temperature setpoints automatically.

Upon initial power up of the thermostat, or after a power failure, the thermostat will check the clock terminals and apply the day (open contact) or night (closed contact) temperature setpoints accordingly.

ECONOMY / COMFORT

During operation, the thermostat automatically calculates the amount of time required to reach the desired setpoint based on the current trending rate of the temperature.

In the economy mode (switch #5 OFF), the thermostat will turn the 2nd stage ON if the calculated time to achieve the setpoint is 3 hours or more.

In the comfort mode, the 2nd stage will turn on if the calculated time is 90 minutes or greater.

TEMPERATURE ACCURACY

Full temperature accuracy will be realized only after the thermostat has been installed and powered for at least one (1) hour.

THERMOSTAT AND SENSOR CALIBRATION

Simply press and hold the FAN button for 10 seconds and adjust with the ▼ or ▲ button.

ADD-ON HEAT PUMPS

Your thermostat is equipped to enhance the performance of an add-on heat pump. In most applications, the thermostat will perform the function of a fossil fuel kit.

To select add-on, place switch #1 to the ON position. The thermostat will turn the compressor off with a call for auxiliary heat. When the switch is set to normal, the thermostat will allow the compressor and the auxiliary heat to be on at the same time.

POWER FAILURES

Your thermostat employs the latest in solid state electronic technology.

One of the unique features of your thermostat is that no battery is required to maintain your selected setpoints in the event of a power loss as the memory is unaffected by power failures of any duration.

When power is restored, the thermostat will continue operating as if the power had never been off.

1 (One) Year Limited Warranty

The manufacturer warrants to the original purchaser that its product and component parts will be free from defects in workmanship and materials for a period of 1 (one) year from the date of purchase. Return to the original point of purchase for replacement of your product.

Warranty Limitations

This warranty begins at date of purchase.

Warranty is Void if:

The date code is defaced or removed.

The product has a defect or damage due to product alteration, connection to an improper electrical supply, shipping and handling, accident, fire, flood, lightning, or other conditions beyond the control of the manufacturer.

The product is not installed according to the manufacturers instructions and specifications.

The product has been installed near sources of electromagnetic interference (EMI) such as arcing relay contacts.

Owner's Responsibility

Provide proof of purchase.

Provide normal care and maintenance.

Pay for freight, labor and travel.

Pay for service calls related to product installation.

Return any defective product.

In no event shall the manufacturer be liable for incidental or consequential damages.

This warranty gives you specific legal rights and you may have others which vary by state and/or province. For example, some states and/or provinces do not allow the exclusion or limitation of incidental or consequential damages, so this exclusion may not apply to you.

The manufacturer's continuing commitment to quality products may require a change in specifications without notice.

This equipment, if installed in strict accordance with the manufacturer's instructions, complies with the limits for a Class B computing device pursuant to Subpart J of Part 15 of FCC rules.

INSTALLATION INSTRUCTIONS

It is recommended that installation be performed by a qualified installer.

Location

To ensure proper operation, the thermostat should be mounted on an inside wall in a frequently occupied area of the building. In addition, its position must be at least 18" (46cm) from any outside wall, and approximately 5' (1.5m) above the floor in a location with freely circulating air of an average temperature. You should avoid the following locations:

- behind doors or in corners where freely circulating air is unavailable;
- where direct sunlight or radiant heat from appliances might affect control operation;
- on an outside wall;
- adjacent to, or in line with, conditioned air discharge grilles, stairwells, or outside doors;
- where its operation may be affected by steam or water pipes or warm air stacks in an adjacent partition space, or by an area behind the thermostat which is not climate controlled;
- where its operation will be affected by the supply air of an adjacent climate control HVAC device;
- near sources of electrical interference such as arcing relay contacts.

Removing the Thermostat from the Subbase

1. Insert a flat blade screwdriver or coin 1/8" into the slot located in the bottom center of the thermostat case and twist 1/4 turn. When you feel or hear a click, grasp the case from the bottom two corners and separate from the subbase.
2. Swing the thermostat out from the bottom.
3. Lift the thermostat up and off the subbase.
4. Place the rectangular opening in the subbase over the equipment control wires protruding from the wall and, using the subbase as a template, mark the location of the two mounting holes (exact vertical mounting is necessary only for appearance).
5. Use the supplied anchors and screws for mounting on drywall or plaster; drill two 3/16" (5mm) diameter holes at the marked locations; use a hammer to tap the nylon anchors in flush to the wall surface and fasten subbase using the supplied screws. (Do not overtighten!)
6. Connect the wires from your system to the thermostat terminals. Carefully dress the wires so that any excess is pushed back into the wall cavity or junction box. Ensure that the wires are flush to the plastic subbase. The access hole should be sealed or stuffed to prevent drafts from affecting the thermostat.

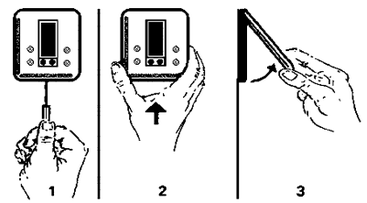

Replacing the Thermostat on Subbase

1. Position the thermostat on the hinged tabs at the top of the subbase.
2. Gently swing the thermostat down and press on the bottom center until it snaps into place.

Thermostat Cover Lock

Insert the plastic lock piece into the bottom of the mounted base. The ends of the lock piece fit snugly under the lock pins extending from the bottom of the mounted base. The tab in the middle of the lock piece extends down from the base.

To release the locking mechanism, press the lock piece up and into the base while gently prying open.

Thermistor Mounting Instructions

When placing the front cover on the thermostat ensure the thermistor is not bent or misaligned.

Ensure that the thermistor does not touch the thermostat case. The thermistor should be placed horizontal to the wall. Ensure the thermistor is not pushed upward into the case.

The thermistor should be aligned so it is visible between the ribs on the bottom of the subbase.

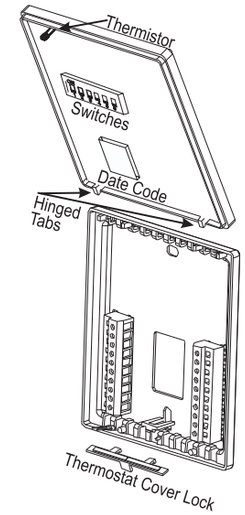

DESCRIPTION OF ICONS

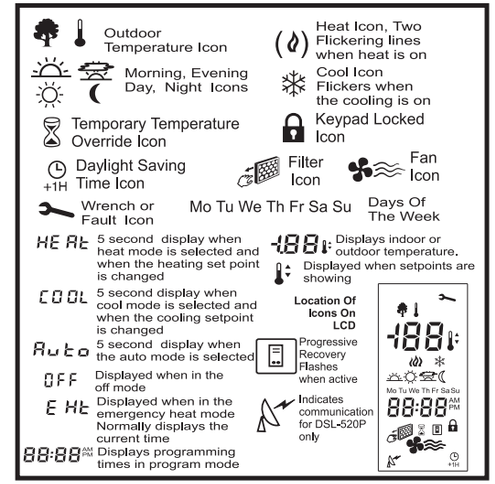

Display icons vary according to the model. Your thermostat may not display all of the icons shown.

WIRING DIAGRAM

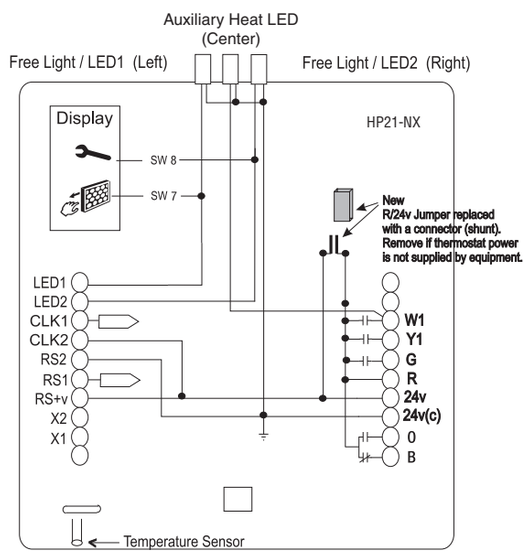

Note: If the 24V(c) is not available from the equipment the shunt may be removed and a separate 24V transformer must be used to power the thermostat.

This thermostat may be used with 24 Volt DC. The negative side of the DC supply must be wired to the 24V (c) terminal.

TERMINAL DESIGNATIONS

W1.....Auxiliary heat is energized as back-up or emergency heat
Y1.....Compressor is energized with a call for heating or cooling
G.....Fan operates with a call for heating or cooling or by pressing the FAN button
R.....Power from equipment

24V.....24 VAC hot and common to power the thermostat
24V(c)

O.....Energizes the reversing valve continuously in cool mode
B.....Energizes the reversing valve continuously in heat or off modes

RS2.....Use to connect up to 6 (XC-IDS) indoor and/or 1
RS1 (XC-ODT) outdoor remote sensor/s.
RS+V When connected the thermostat will automatically use the the XC-IDS temperature sensor and not its own. Refer to the instructions included with the sensor.

LED1.....Free lights for status or function indication
LED2

CLK1.....Use with dry contact relay for alternate setpoints
CLK2

X1.....Remote communications. Refer to instructions included with software.
X2.....X1 return, connected to 24V(c)

DIP SWITCH OPTIONS AND FUNCTIONS

Positioning the DIP switches in either the ON or OFF position enables you to choose between two different options. The DIP switches are located on the interior of your thermostat and may be accessed by following the procedure for removing the thermostat from the subbase. The following list describes your DIP switch options.

DIP Switch	DIP Switch OFF	DIP Switch ON
1	Normal	Add on
2	1 hour override	3 hour override
3	4 minute minimum ON	2 minute minimum ON
4	Keypad unlock	Keypad lock
5	Economy	Comfort
6	Not used (OFF position)	Not used
7	LED #1+no icon	LED #1+ filter icon
8	LED #2+no icon	LED #2+ fault icon

1. Normal or Add-On Heat Pump In the normal position the thermostat will allow the compressor and the auxiliary heat to be on at the same time. In the add-on position, the compressor is turned off with a call for auxiliary heat.

2. Temperature Override Sets a temperature override to either 1 hour or 3 hours when the keypad is locked.

3. 2 Minute or 4 Minute On Times This option allows you to run the equipment for either a 2 or 4 minute minimum off and on time.

4. Keypad Lock In the ON position locks out all buttons except the OUTDOOR temperature button.

5. Economy/Comfort In the OFF position, the thermostat will be in economy mode. In the ON position the thermostat will be in comfort mode.

6. Not Used This switch must remain in the OFF position.

7. LED #1 + Indication In the OFF position LED #1 will light when the terminal is energized. In the ON position LED #1 will light and a filter icon will be displayed on the LCD when the terminal is energized.

8. LED #2 + Indication In the OFF position LED #2 will light when the terminal is energized. In the ON position LED #2 will light and a fault icon will be displayed on the LCD when the terminal is energized.

SPECIFICATIONS

Rated Voltage .....20-30 Vac, 24 nominal

Rated A.C. Current.....0.050 Amps to 0.75 Amps continuous per output with surges to 3 Amps Max.

Rated D.C. Current.....0 Amps to 0.75 Amps continuous per output with surges to 3 Amps Max.

Control Range.....Heating: 38° to 88°F in 1° Steps
5° to 30°C in 1° Steps
Cooling: 60° to 108°F in 1° Steps
16° to 40°C in 1° Steps

Thermostat Measurement Range ....28° to 124°F or 0° to 48°C

O.D.T. Displayed Range .....-50° to 119°F or -48° to 47°C

Minimum Deadband.....(between heating and cooling) 2°F or 1°C

NOTE: This thermostat contains electronic circuitry replacing the conventional mechanical anticipator.